THIS DOCUMENT IS THE PROPERTY OF COOMBS ENGINEERING, PC. IT IS NOT TO BE MODIFIED OR REPRODUCED WITHOUT WRITTEN CONSENT BY CEPC. THIS DRAWING SET IS INTENDED TO PROVIDE ALL INFORMATION TO MEET THE CONTRACT DOCUMENT AND IS TO BE USED ONLY FOR THE PROJECT NOTED. OWNER MUST VERIFY ALL DIMENSIONS AND OTHER RELATED INFORMATION PRIOR TO CONSTRUCTION. MONETARY LIABILITY BY COOMBS ENGINEERING IS LIMITED TO THE CONTRACT AMOUNT

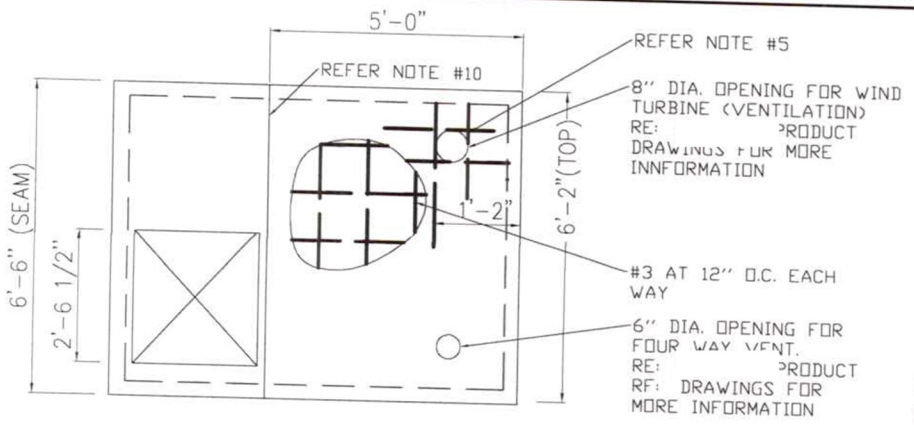

PLAN VIEW

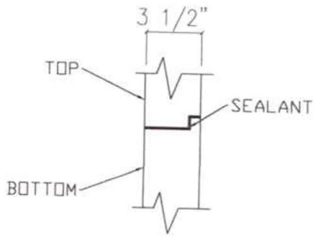

HORIZONTAL WALL JT. SECTION (N.T.S.)

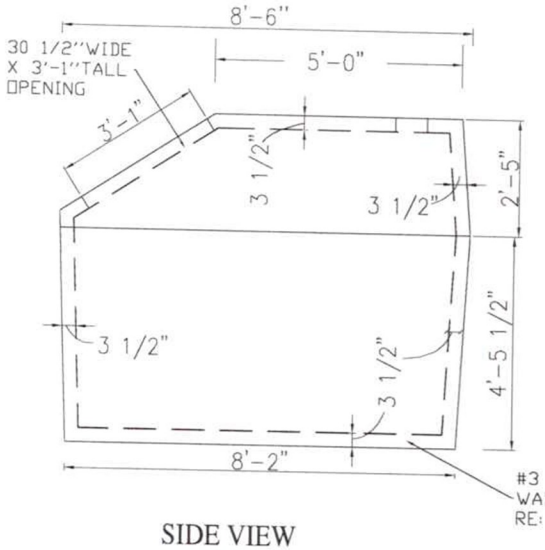

SIDE VIEW

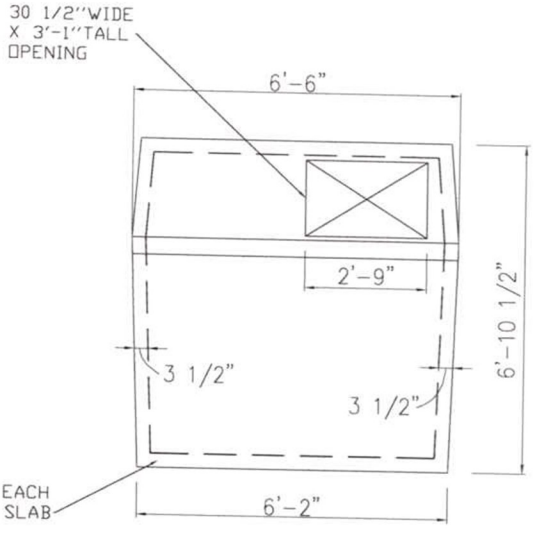

END VIEW

NOTES:

1. CONCRETE THICKNESS SHALL BE AS SHOWN.
2. CONCRETE STRENGTH =6000 PSI. THE WATER-CEMENT RATIO SHALL NOT EXCEED 0.45.
3. REINFORCING SHALL BE GRADE 40 #3 OR #4 BARS AS SHOWN, PLUS FIBERMESH 300 POLYPROPYLENE FIBRILLATED FIBERS FOR SECONDARY REINFORCING.
4. REINFORCING SHALL BE PLACED AT THE CENTER OF SLABS AND WALLS.
5. PROVIDE (1)-#4 BAR 2 INCHES FROM FACE OF ALL OPENINGS. EXTEND 12 INCHES PAST OPENING.
6. EXTEND 90 DEGREE BARS (DOWELS) FROM BOTTOM SLAB INTO WALLS. MATCH DOWEL BARS WITH SPACING OF BOTTOM SLAB BARS AND LAP 16 INCHES.
7. THE SHELTER TOP SLAB IS DESIGNED TO SUPPORT A MINIMUM UNIFORM LOAD OF 200 PSF.
8. ALL SOILS ADJACENT TO THE SHELTERS SHALL BE GRADED SITE SOILS, PROPERLY COMPACTED IN UNIFORM LIFTS NOT TO EXCEED 8 INCHES.
9. IF INSTALLATION DEPTH EXCEEDS 3'-9", EXTENDED PERIODS OF HIGH GROUND WATER MAY RESULT IN SLIGHT FLOTATION OF THE SHELTER. IF THJS OCCURS, RESET AFTER SOILS DRY.
10. OPENING FOR DOOR, REFER PRODUCT DRAWINGS FOR MORE INFORMATION. CENTER OPENING WITHIN HEIGHT OF SLOPING PANEL.
11. THE DESIGN OF THE CONCRETE STRUCTURE COMPLIES WITH 2014 FEMA P 320 AND ICC-500 STANDARDS FOR TORNADO SHELTER.
12. LOCATION OF OPENING IS ALLOWED ANYWHERE ON THE SLOPED FRONT AS LONG AS REINFORCEMENT REQUIREMENTS ARE MET AND DOOR HARDWARE DOES NOT INTERFERE.

PROJECT: **17030.01**
6X8 SLOPED FRONT STORM SHELTER

ISSUE DATE: **09-14-2017**

SHEET NUMBER: **S-01**

Coombs Engineering, P.C.
STRUCTURAL ENGINEERS
1710 N. Greenville Ave, Suite 815
Richardson, Texas 75081 214-287-4696
Reg # F-13205